Krusman
EMERGENCY SHOWERS

Tfn +46 (0)21 - 14 92 00
Fax +46 (0)21 - 14 92 50

KN1992

CORROSION–RESISTANT SAFETY STATION WITH PVC CONSTRUCTION

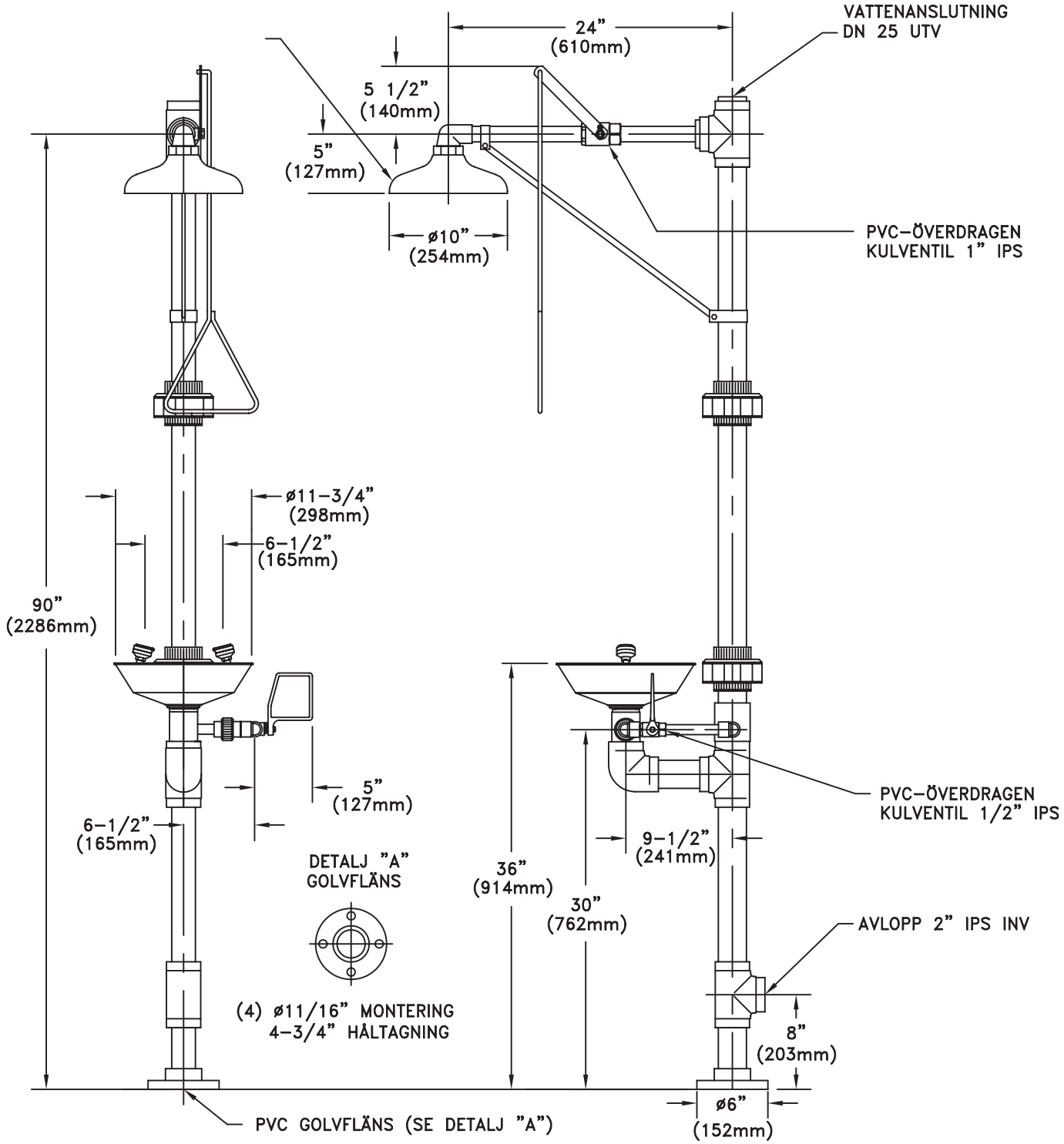

UNITS (EXCEPT THOSE WITH SELF–CLOSING VALVES) COMPLY WITH THE REQUIREMENTS OF ANSI Z358.1. TEST ALL EMERGENCY EQUIPMENT AT LEAST WEEKLY.

Drawing Number: K431–920 Approved: _____ Revision Number: 012605–TPS